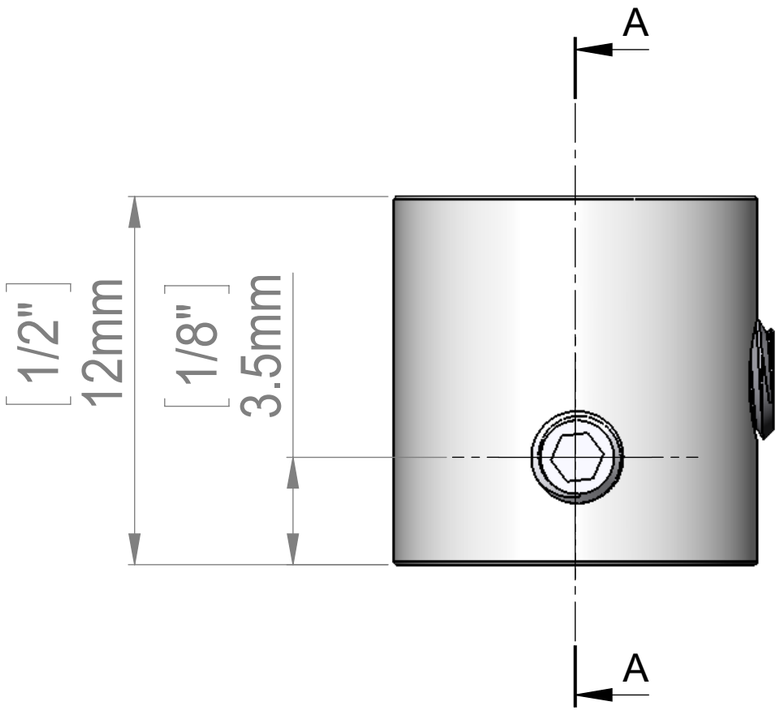


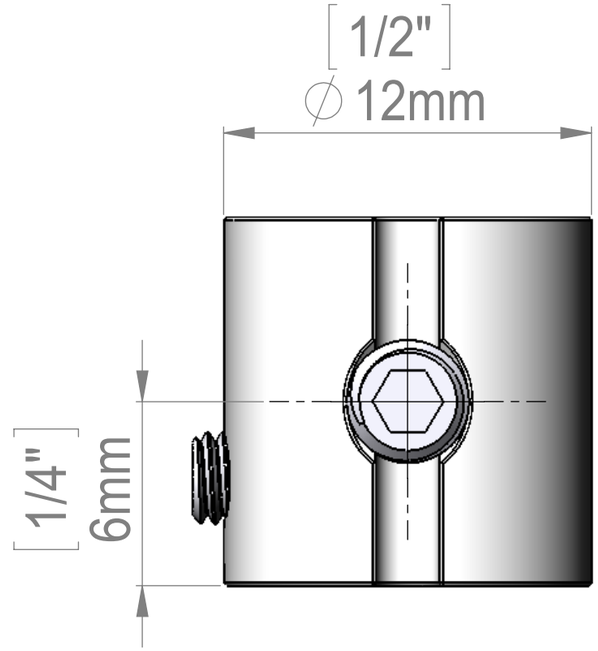


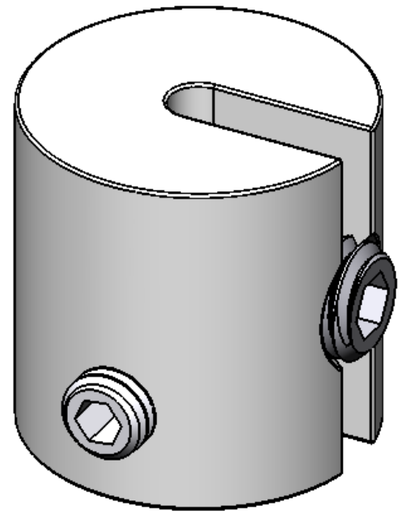

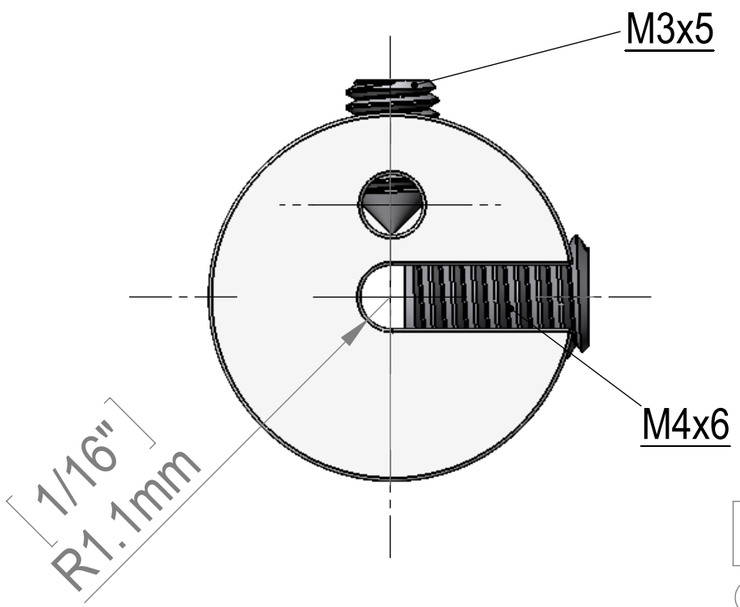


SECTION A-A

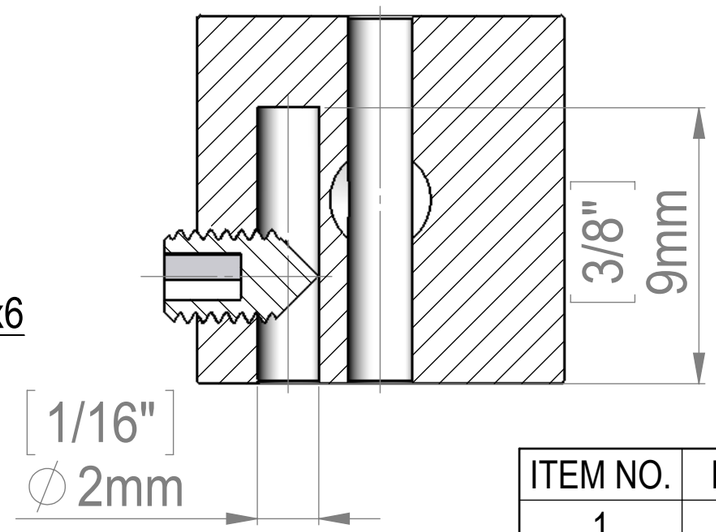


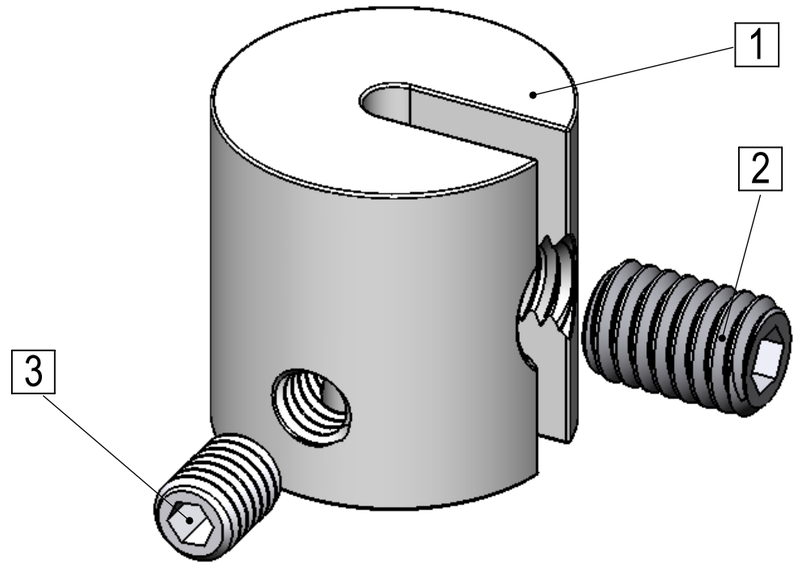


| ITEM NO. | PART NUMBER | DESCRIPTION | QTY. |
|---|---|---|---|
| 1 | CA1212A | | 1 |
| 2 | M4x6 | | 1 |
| 3 | M3x5 | | 1 |

| | | | |
|---|---|---|---|
| Title : CA1212 | | Scale : 5:1 | |
| | | Sizes : Letter Landscape | Customer: |
| | Material: | Finish | Qty : / Rep : |
| | N°programme laser | N°prog. Mécanum. | N° Plan : CA1212 |